GEARSYNC by DIEQUA

HELICAL PARALLEL
GEARBOXES AND GEARMOTORS

COMPATIBILITY GUIDE

DieQua Corporation

DieQua Corporation is a manufacturer and supplier of a wide range of motion control and power transmission drive components. Our focus has always been to provide products that offer superior value, the highest quality, the most unique designs, and the most reliable performance. DieQua continues to develop innovative products to meet the changing technological needs of the industries and customers we serve.

IN THIS GUIDE:

Cover Kits 3
GP Aluminum Series 4-6
GHP Iron Series 7-10

The DieQua Process

DieQua has an enormous product offering. Making a proper selection, or even knowing what is possible can be daunting. Our staff is specifically trained to first listen, and then ask questions, to gain a thorough understanding of your specific and unique application. Then, we help you navigate to the specific product, or even a special design, that will meet or exceed your needs. It is through our consultative approach that we are most helpful to our customers in finding the best design solution.

A Perfect Precision Coupling

DieQua has created a precision coupling offering to include Bellow couplings, Precision Elastomer couplings, Line Shaft couplings and Torque Limiters. These products offer a perfect range of precision, torsional stiffness, torque capacity, and protection from misalignment. These couplings are a perfect adjunct to the many gearbox, gearmotor, and mechanical components technologies we offer to the market.

Cover Kit + Flexible Coupling Input

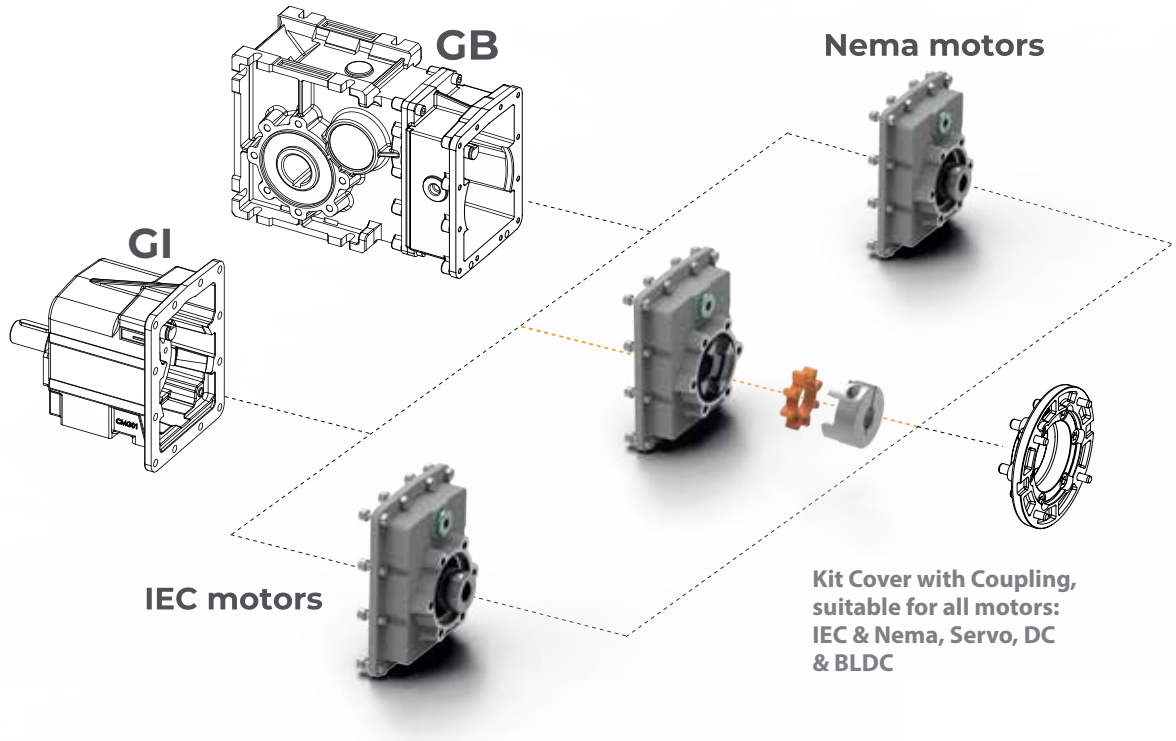

The new Coupling for helical in-line gearmotors and helical bevel gearmotors is finally available. With just one type of cover it is now possible to couple the gearbox to all types of motors: IEC and Nema, AC, DC and Servo.

The solution consists of two half-couplings made of steel with a synthetic, elastic element interposed between them. The motor-side half-coupling is in fact a clamping device which allows the motion transmission without the key being applied on the motor shaft.

- Greater flexibility for setting up the gearbox motor connection by replacing only the motor-side half-coupling and the flange.
- Possibility of using brushless motors even without key, exploiting their potential to the maximum. In fact, accelerations, decelerations and even sudden reversals of the direction of motion are allowed.
- Total elimination of contact oxidation, called "tribocorrosion", which tends to weld the motor shaft to the rigid connection sleeve; removing the motor from the gearbox even after a few months of operation can be very difficult in the classic sleeve configuration; with this new solution it is always possible.
- Significant reduction of the operating temperatures of the gearbox in the motor connection area, guaranteeing greater reliability and duration of the lubricating elements (sealing rings).

GP ALU Series

UP TO 500 Nm

The main features of GP range are:

- **Die-cast aluminum housings and input flanges**
- **Cast output flanges**
- **Ground-hardened helical gears**
- **Permanent synthetic oil long-life lubrication**
- **Housing in standard Grey RAL 9006**

Standard Shaft:	Inch	mm
GP 902 – GP 903	1.25	35
GP 912 – GP 913	1.375	40

ALU Series — Compatibility Guide — GP 902 – 903

		Hollow Shaft Diameter	M2 max (Nm)	Ratio			IEC max 2nd	IEC max 3rd	Radial Load (N)	Weight (kg)
				i min	i max/2	i max/3				
GEARSYNC	**GP 902/3**	**1.25" and 35mm**	**400**	**5.87**	**87.27**	**376.15**	**112B5**	**90B5**	**6000**	**11**
SEW	F47	35	400	4.99	30.86	190.76	90B5	90B5	5920	
NORD	SK1382NB	35	370	16.28	/	381.45	/	100B5	5100	
MOTOVARIO	S0522/3	30	350	8.63	72.83	314.21	112B5	112B5	6000	
BONFIGLIOLI	F252/3	35	400	6.9	44.4	333.1	112B5	112B5	6500	

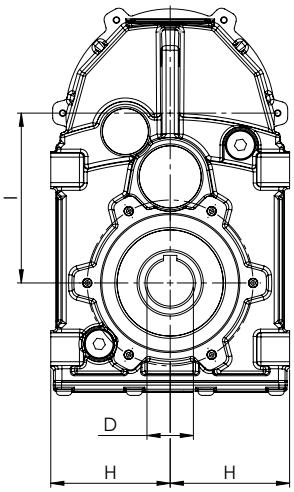

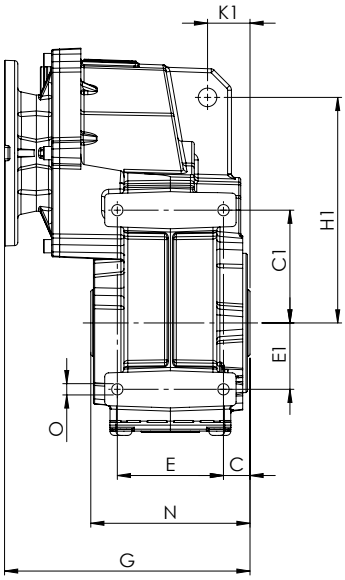

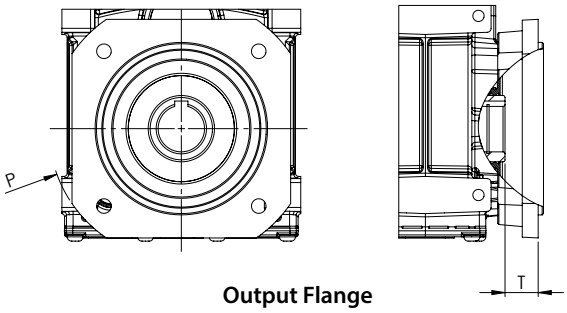

Output Flange

		Output shaft "D"	Output centerline to input "I"	Edge to output centerline "H"	Output centerline to center of nose "H1"	Face output to center of nose "K1"	Face output to body mounting "C"	Mounting body "E"	Mounting body "C1"	Mounting body "E1"	Mounting hole "O"	Output flange diameters per IEC "P"
GEARSYNC	**GP 902/3**	**1.25" and 35mm**	**128**	**90**	**170**	**32**	**20**	**80**	**85**	**50**	**M10**	**200-250**
SEW	F47	35	128.1	94	179	32	31	93	102	43	M10	200
NORD	SK1382	35	113	76	165	34	31	100	35	35	M10	160-200
MOTOVARIO	S052/3	30	125	90.5	128	31.5	26.5	70	90	40	M10	200-250
BONFIGLIOLI	F252/3	35	128.75	94	162	43.5	(not std.)	(not std.)	(not std.)	(not std.)	(not std.)	200-250

GP 912 – 913 Compatibility Guide ALU Series

		Hollow Shaft Diameter	M2 max (Nm)	Ratio			IEC max 2nd	IEC max 3rd	Radial Load (N)	Weight (kg)
				i min	i max/2	i max/3				
GEARSYNC	GP 912/3	1.375" and 40mm	600	5.71	79.52	342.72	112B5	90B5	10000	14.9
SEW	F57	40	600	5.18	40.13	199.70	132B5	132B5	9200	
NORD	SK2282/2382	35	563	4.51	127.51	763.41	112B5	90B5	8200	
MOTOVARIO	S062/3	35	600	8.00	67.47	267.16	112B5	112B5	10000	
BONFIGLIOLI	F312/3	35	600	6.9	44.6	374.4	112B5	112B5	6500	

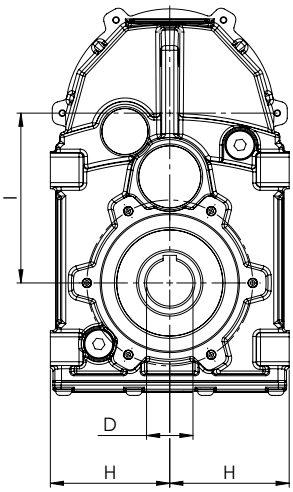

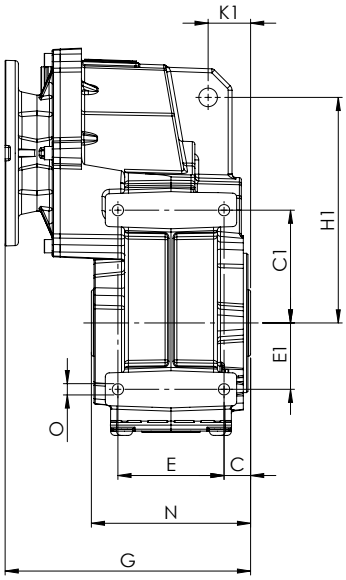

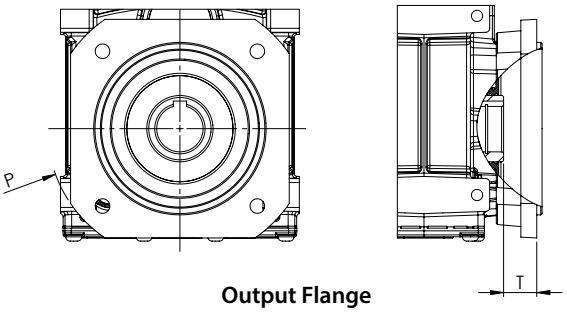

Output Flange

		Output shaft "D"	Output centerline to input "I"	Edge to output centerline "H"	Output centerline to center of nose "H1"	Face output to center of nose "K1"	Face output to body mounting "C"	Mounting body "E"	Mounting body "C1"	Mounting body "E1"	Mounting hole "O"	Output flange diameters per IEC "P"
GEARSYNC	GP 912/3	1.375" and 40mm	146	100	190	45	22.5	95	95	60	M12	200-250
SEW	F57	40	136	100	198	40.5	33.5	102	115	55	M12	250
NORD	SK2282/ 2382	35	(2st): 147 (3st): 104.5	76	165	34	31	100	35	35	M10	160-200
MOTOVARIO	S052/3	35	143	96.5	170	32	30	80	102	45	M12	200-250
BONFIGLIOLI	F312/3	35	150.5	105	170	54	(not std.)	(not std.)	(not std.)	(not std.)	(not std.)	250-300

GHP IRON Series

UP TO 3,200 Nm

The main features of GHP range are:

- **Robust cast iron housings**
- **High degree of modularity**
- **Lubrication with synthetic oil**
- **Coupled to motor with flexible coupling**
- **Epoxy powder coating RAL 7016 standard**

Standard Shaft:	Inch	mm
GHP 922 – GHP 923	1.5	40 45
GHP 932 – GHP 933	2	50
GHP 942 – GHP 943	2.375	60

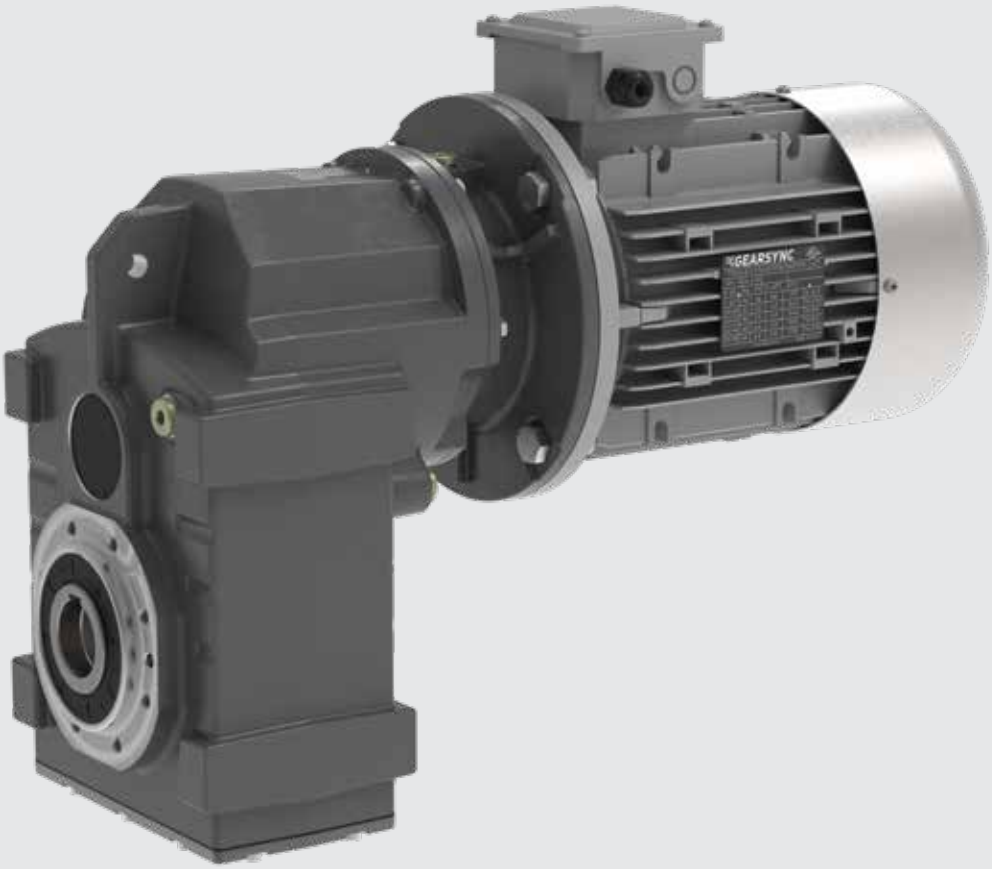

GHP 922 – 923 Compatibility Guide IRON Series

		Hollow Shaft Diameter	M2 max (Nm)	Ratio			IEC max 2nd	IEC max 3rd	Radial Load (N)	Weight (kg)
				i min	i max/2	i max/3				
GEARSYNC	**GHP 922/3**	**1.5", 40mm and 45mm**	**1100**	**5.66**	**67.50**	**375.38**	**132B5**	**112B5**	**9500-18500**	**43**
SEW	F67	40	820	3.97	36.30	228.99	132B5	132B5	10300	
NORD	SK3282/3382	40	1039	4.48	112.23	1022.42	132B5	112B5	16300-22800	
SIEMENS	FZ68-FD68	40 (45)	1000	3.97	61.17	296.18	132B5	112B5	8900-13650	
MOTOVARIO	S082/3	40 (45lr)	1000	7.34	61.98	360.58	132B5	112B5	18000	
BONFIGLIOLI	F41	40	1100	6.7	47.9	344.8	132B5	132B5	8500	

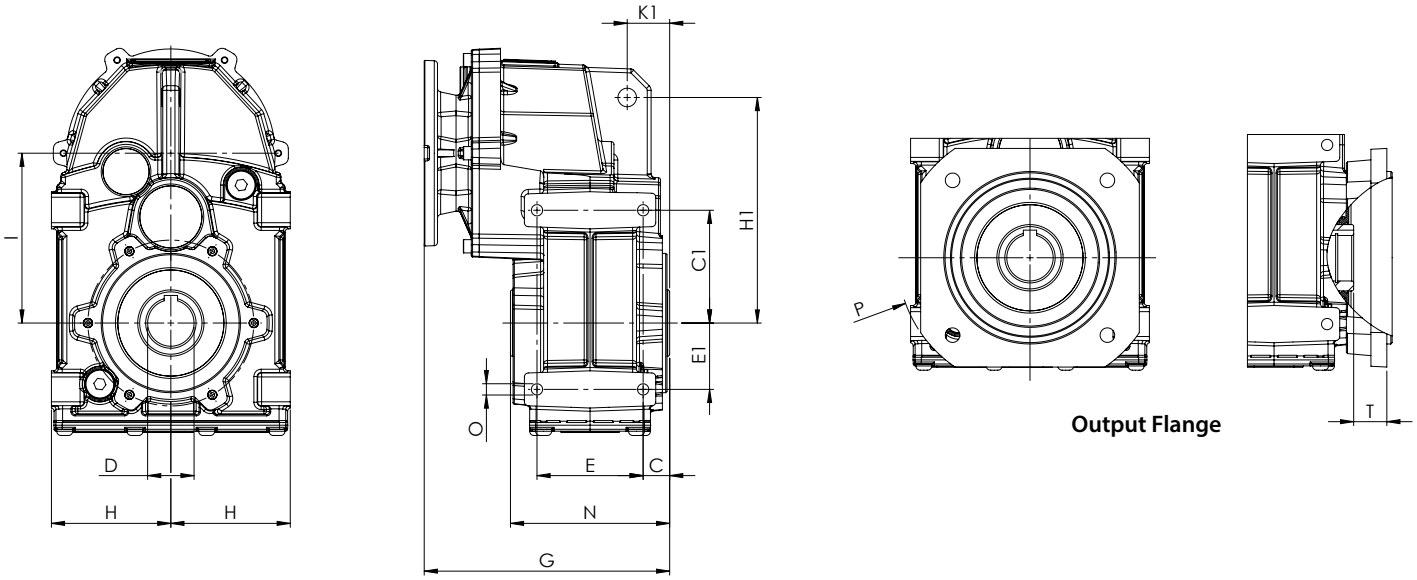

Output Flange

		Output shaft "D"	Output centerline to input "I"	Edge to output centerline "H"	Output centerline to center of nose "H1"	Face output to center of nose "K1"	Face output to body mounting "C"	Mounting body "E"	Mounting body "C1"	Mounting body "E1"	Mounting hole "O"	Output flange diameters per IEC "P"
GEARSYNC	**GHP 922/3**	**1.5", 40mm and 45mm**	**173**	**115**	**218**	**41**	**34**	**112**	**130**	**60**	**M12**	**200-250-300**
SEW	F67	40	159.5	106	218	41	37.5	112	130	60	M12	250
NORD	SK3282/3382	40	178	113	250	39						250-300
SIEMENS	FZ68-FD68	40 (45lr)	180	112	218	41	34	112	130	60	M12	200-250-300
MOTOVARIO	S082/3	40	170	112.5	218	41	37	106	130	60	M12	200-250-300
BONFIGLIOLI	A41	40	176	121	218	56.5						200-250-300

IRON Series — Compatibility Guide — GHP 932 – 933

		Hollow Shaft Diameter	M2 max (Nm)	Ratio			IEC max 2nd	IEC max 3rd	Radial Load (N)	Weight (kg)
				i min	i max/2	i max/3				
GEARSYNC	**GHP 932/3**	**2" and 50mm**	**1700**	**6.13**	**72.90**	**405.42**	**160B5**	**112B5**	**12000-2300**	**55**
SEW	F77	50	1500	4.28	36.58	281.71	132B5	132B5	15700	
NORD	SK4282/4382	50	2000	4.70	155.40	1585.08	160B5	112B5	17500-30000	
SIEMENS	FZ88-FD88	50 (60)	1900	4.77	64.58	404.92	160B5	132B5	14800-23400	
MOTOVARIO	S102/3	50	1600	8.06	67.84	394.69	160B5	112B5	11500-22000	
BONFIGLIOLI	F51	50	1800	7.2	37.1	352.5	180B5	180B5	12000	

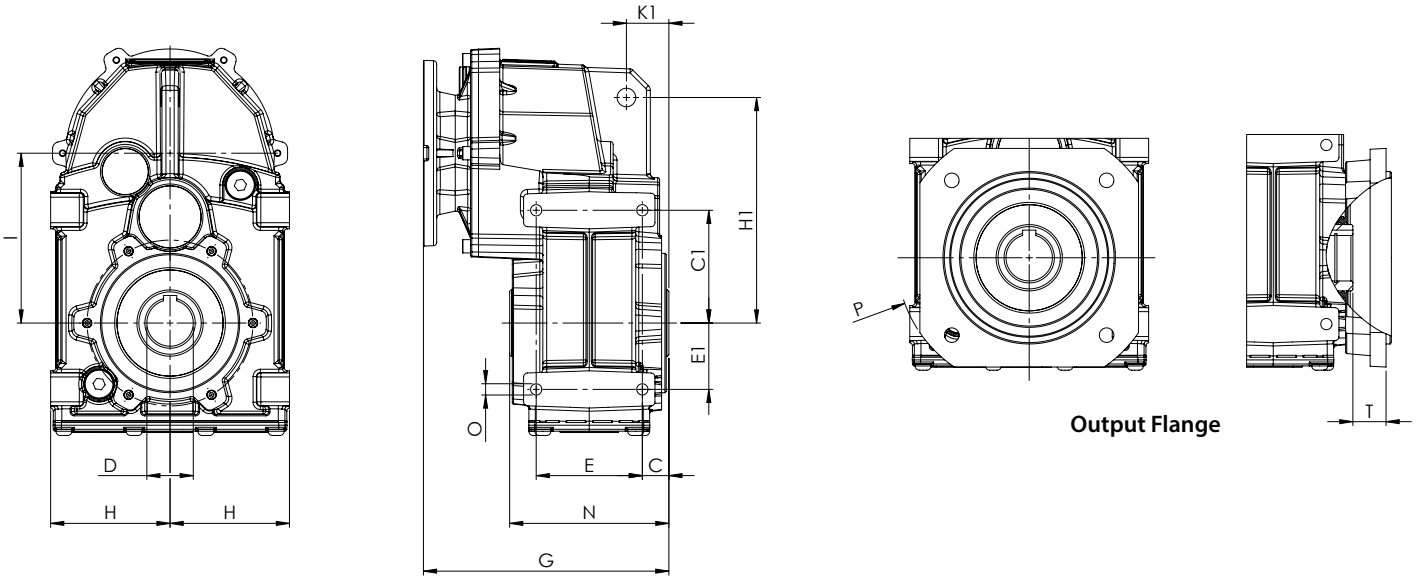

		Output shaft "D"	Output centerline to input "I"	Edge to output centerline "H"	Output centerline to center of nose "H1"	Face output to center of nose "K1"	Face output to body mounting "C"	Mounting body "E"	Mounting body "C1"	Mounting body "E1"	Mounting hole "O"	Output flange diameters per IEC "P"
GEARSYNC	**GHP 932/3**	**2" and 50mm**	**180**	**130**	**235**	**50**	**36.5**	**137**	**140**	**70**	**M16**	**250-300-350**
SEW	F77	50	200	135	278	50	36.5	140	170	70	M16	300
NORD	SK4282/4382	50	206	127.5	281	48						300
SIEMENS	FZ88-FD88	50 (60)	230	132	278	50	35	140	170	100	M16	300
MOTOVARIO	S102/3	50	180	130	278	50	36.5	137	205	70	M16	250-300-350
BONFIGLIOLI	F51	50	211.5	136.5	278	65	35	110	170	70	M14	300-350-400

GHP 942 - 943 Compatibility Guide IRON Series

		Hollow Shaft Diameter	M2 max (Nm)	Ratio			IEC max 2nd	IEC max 3rd	Radial Load (N)	Weight (kg)
				i min	i max/2	i max/3				
GEARSYNC	GHP 942/3	2.375" and 60mm	3200	7.93	77.00	356.40	180B5	132B5	15000-31000	98
SEW	F87	60	3000	4.12	33.92	270.68	180B5	180B5	19800	
NORD	SK5282/5382	60	3200	4.32	134.03	1367.08	180B5	112B5	31000-44000	
SIEMENS	FZ108-FD108	60 (70)	3400	5.68	64.21	424.49	180B5	160B5	17900-28700	
MOTOVARIO	S122/3	60	3000	8.48	66.00	238.93	200B5	132B5	14700-30000	
BONFIGLIOLI	F60	60	2900	(3st) 9.2		(3st) 280.7		180B5	20000	

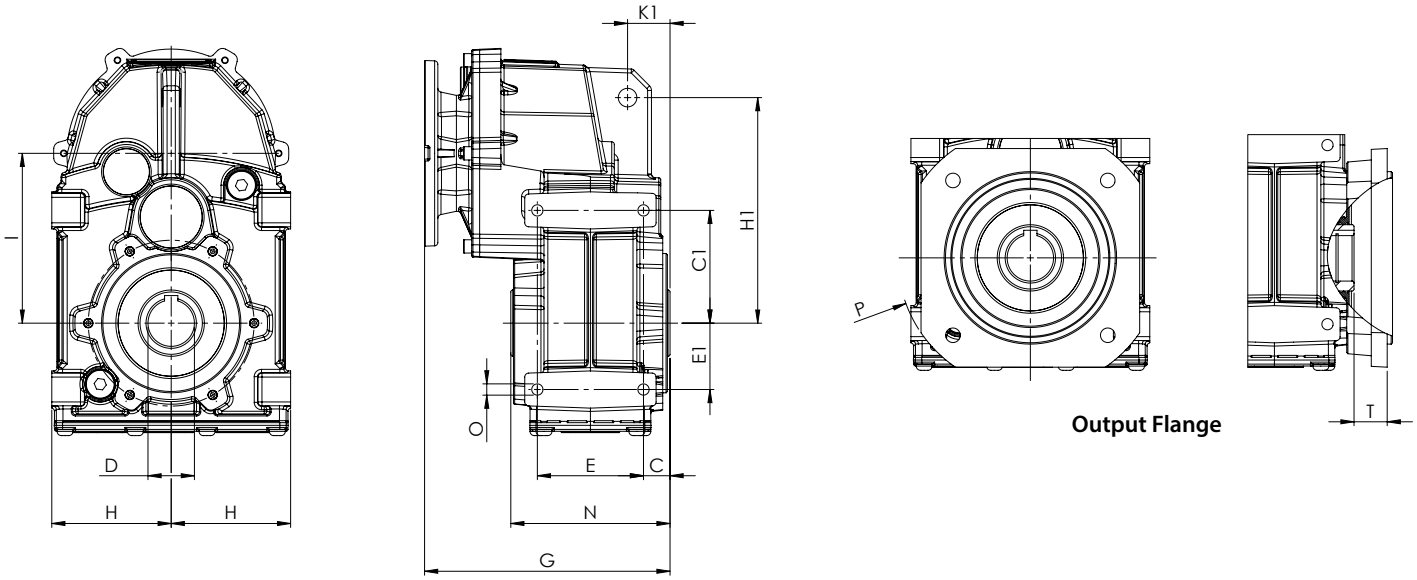

		Output shaft "D"	Output centerline to input "I"	Edge to output centerline "H"	Output centerline to center of nose "H1"	Face output to center of nose "K1"	Face output to body mounting "C"	Mounting body "E"	Mounting body "C1"	Mounting body "E1"	Mounting hole "O"	Output flange diameters per IEC "P"
GEARSYNC	GHP 942/3	2.375" and 60mm	235	165	335	62	43	165	210	100	M16	300-350-450
SEW	F87	60	246.7	165	346	62	43	165	210	100	M16	350
NORD	SK5282/5382	60	251	153	341	53						350
SIEMENS	FZ108-FD108	60 (70)	280	160	346	62	37.5	165	210	100	M16	350
MOTOVARIO	S122/3	60	235	165	346	62	43	165	210	100	M16	300-350
BONFIGLIOLI	F60	60	267	149	325	81	39.5	140	190	70	M16	300-350-400

NOTES

ABOUT DIEQUA

Founded in 1980 by Dietmar Quaas, and now owned by his sons, DieQua Corporation has expanded from a single product line to become a leading manufacturer and supplier of an extensive line of high-quality power transmission and precision motion control products, including gearboxes, servo gearheads, screw jack systems, speed reducers, cycloidal reducers, and connecting components. The company also offers custom product modifications and complete design solutions for virtually any application. DieQua Corporation serves a wide range of industries, including medical and health care, marine engineering, renewable energy, mining, transportation, steel, forestry and lumber, water and wastewater, automotive, and factory automation, to name a few.

An experienced and knowledgeable technical sales, customer service, and engineering support staff, as well as local distributors, ensure that DieQua customers in North America, Mexico and South America select the optimum components, systems, and best design solutions for their specific requirements.

The DieQua family of products

Spiral Bevel Gearboxes

Servo Gearheads

Cycloidal Reducers & Positioners

Screw Jack Systems

Helical Speed Reducers

Speed Modulating Gearboxes

Zero Backlash Couplings and Line Shafts

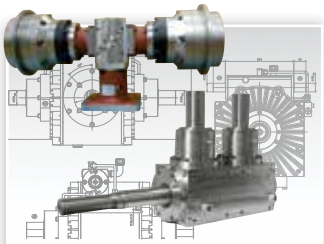

Custom Designs

The DieQua Advantage

Engineering Support

DieQua Corporation has several decades of combined experience specifying power transmission and motion control components. This assures proper selection of components and systems to suit your unique requirements.

Warehousing

We pride ourselves for our extensive in-stock inventory. For fast product turnaround, DieQua Corporation stocks many components of various ratios and sizes, ready to ship fast.

Manufacturing and Assembly

DieQua Corporation now manufactures or assembles most of the products, for on-time delivery of standard orders as well as prototypes. We are ISO 9001 certified and are constantly improving our quality systems to ensure our customers receive the best products.

DIEQUA Corporation

180 Covington Drive
Bloomingdale, IL 60108 USA

630.980.1133

www.diequa.com

GEARSYNC by DIEQUA

0525/XK