GB ALU Series

UP TO 500 Nm

The main features of GB range are:

- **Die-cast aluminum housings and input flanges**
- **Cast iron feet and output flanges**
- **Ground-hardened helical gears**
- **Permanent synthetic oil long-life lubrication**
- **Housing in standard Grey RAL 9006**

Standard Shaft:	Inch	mm
GB 402	0.75	18 20
GB 502	1.00	25 28* Special
GB 633	1.125	30
GB 903	1.375	35 40* Special

*Note: Available, but not a standard offering

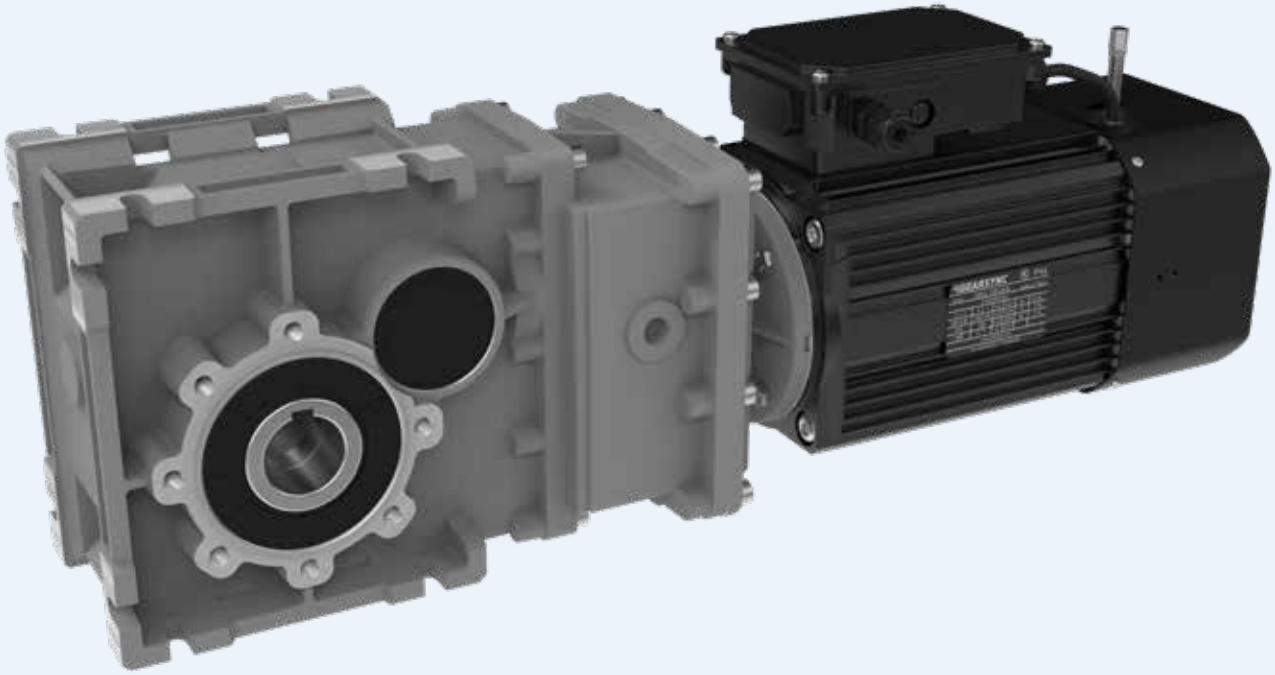

Cover Kit + Flexible Coupling Input

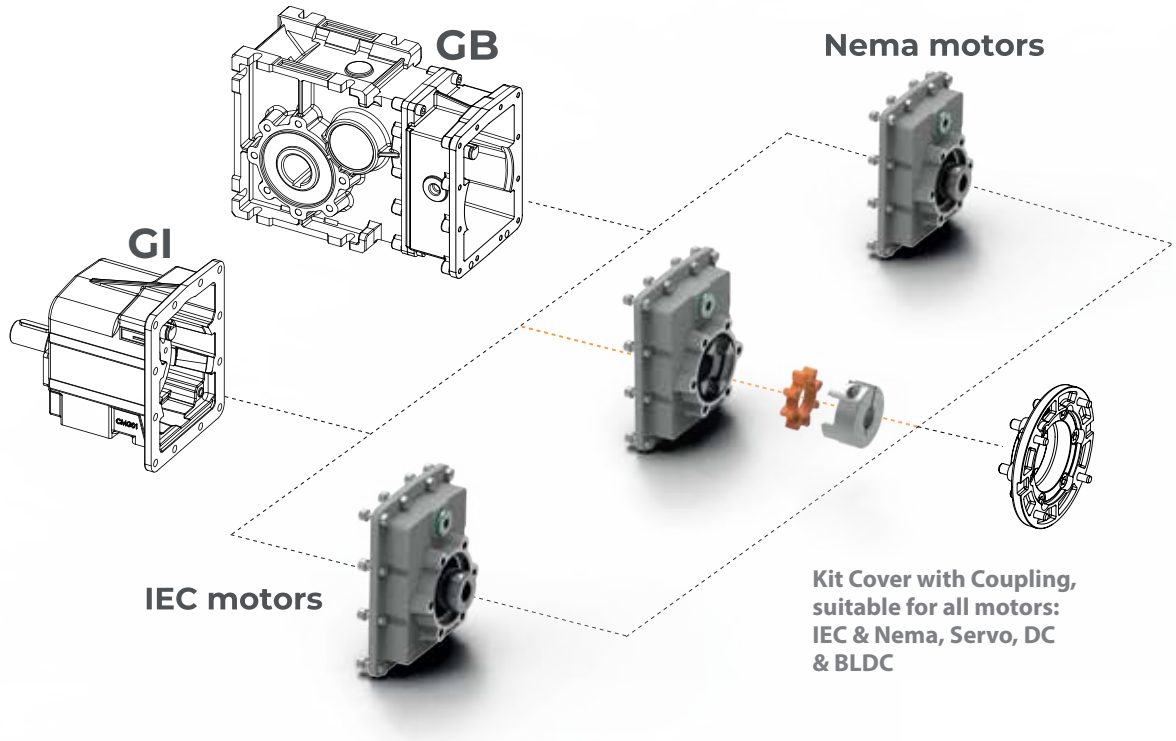

The new Coupling for helical in-line gearmotors and helical bevel gearmotors is finally available. With just one type of cover it is now possible to couple the gearbox to all types of motors: IEC and Nema, AC, DC and Servo.

The solution consists of two half-couplings made of steel with a synthetic, elastic element interposed between them. The motor-side half-coupling is in fact a clamping device which allows the motion transmission without the key being applied on the motor shaft.

- Greater flexibility for setting up the gearbox motor connection by replacing only the motor-side half-coupling and the flange.
- Possibility of using brushless motors even without key, exploiting their potential to the maximum. In fact, accelerations, decelerations and even sudden reversals of the direction of motion are allowed.
- Total elimination of contact oxidation, called "tribocorrosion", which tends to weld the motor shaft to the rigid connection sleeve; removing the motor from the gearbox even after a few months of operation can be very difficult in the classic sleeve configuration; with this new solution it is always possible.
- Significant reduction of the operating temperatures of the gearbox in the motor connection area, guaranteeing greater reliability and duration of the lubricating elements (sealing rings).

ALU Series Compatibility Guide GB 402

		Output torque (Nm)	Radial load (N)	Ratio			Weight (kg)
				i min	i max/2	i max/3	2 stages only
GEARSYNC	**GB 402**	**65**	**3500**	**6.18**	**72.5**	**3.4**	**3.2 Aluminum**
SEW	K19	80	4300	4.5	44.08		4.9 Aluminum
NORD	SK92072	90	3200	3.85	54.65		6.2 Aluminum
LENZE	GKR03	50	3000	5.411	61.972		Aluminum

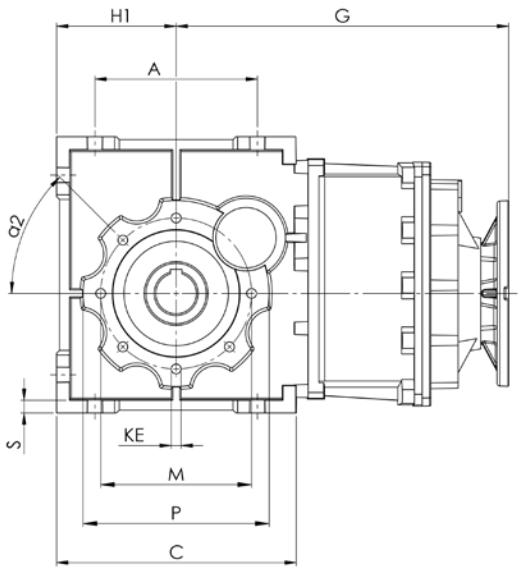

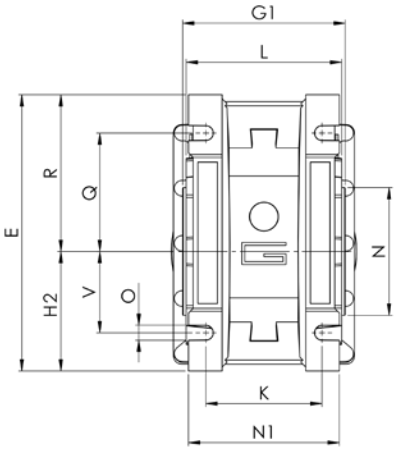

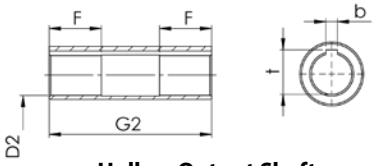

Hollow Output Shaft

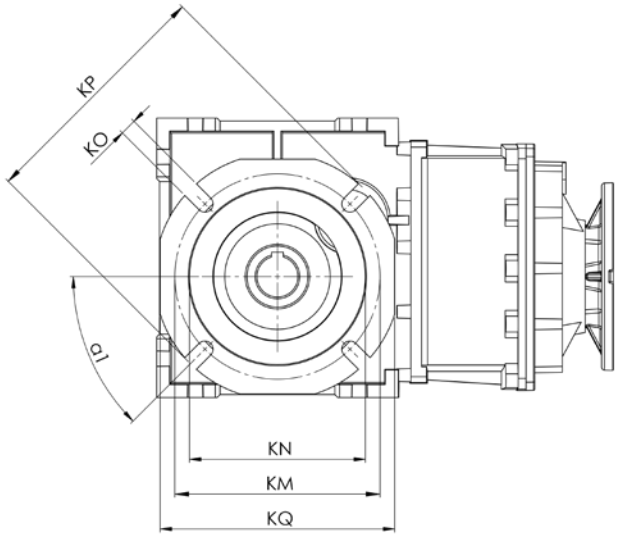

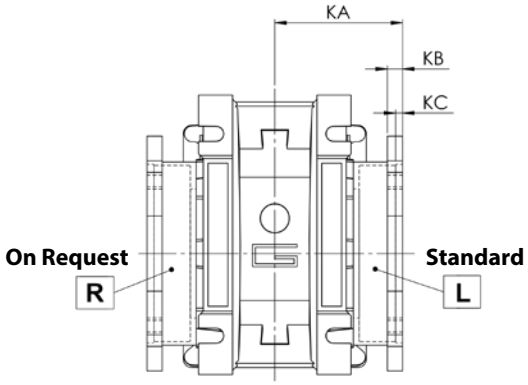

		Output shaft "D2"	Output centerline to input "G"	Edge to output centerline "H1"	Bottom to output centerline "H2"	Overall width "G1"	Mounting "A"	Mounting "K"	Overall height "E"
GEARSYNC	**GB 402**	**18mm, 20mm, 0.75"**	**154.5**	**50**	**50**	**78**	**70**	**60**	**121.5**
SEW	K19	20mm, 0.75"	116	50	50	100	60	60	100
NORD	SK92072	25mm, 0.75"	132.6	55.9	35	103	70	90	98.3
LENZE	GKR03	20mm and 25mm	145	50	50	120	70	75	117

GB 502 Compatibility Guide ALU Series

		Output torque (Nm)	Radial load (N)	Ratio		Weight (kg)
				i min	I min 2/3	2 stages only
GEARSYNC	**GB 502**	**125**	**4200**	**6.18**	**72.5**	**4.7**
MAS	40	100	4000	6.12	67.07	
BONFIGLIOLI	A05	100	2000	5.4	90	
SEW	K29	129	4800	3.19	54.89	
NORD	SK92172.1	120	3200	4.1	72.31	

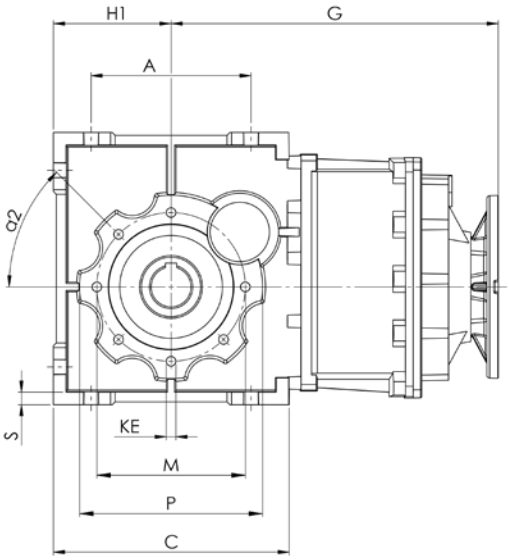

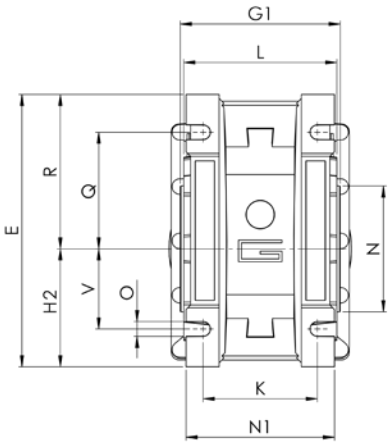

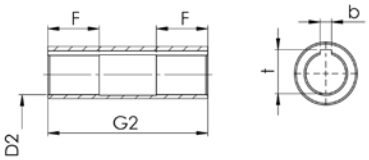

Hollow Output Shaft

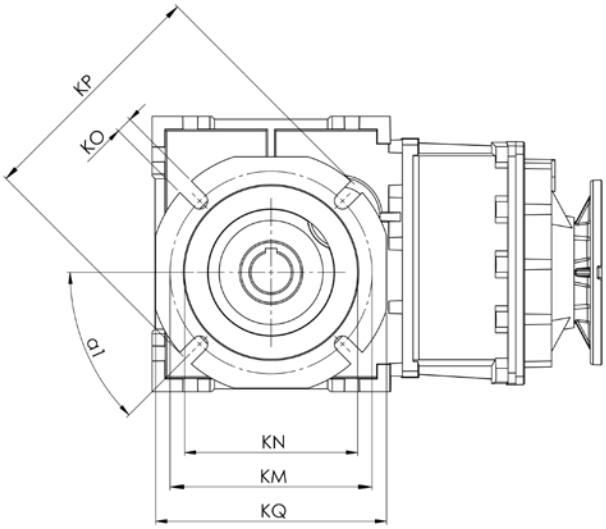

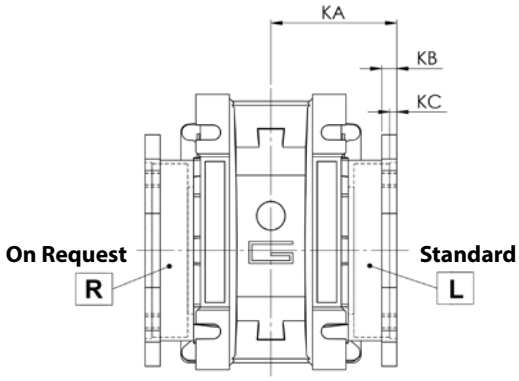

		Output shaft "D2"	Output centerline to input "G"	Edge to output centerline "H1"	Bottom to output centerline "H2"	Overall width "G1"	Mounting "A"	Mounting "K"	Overall height "E"
GEARSYNC	**GB 502**	**25mm, 1.00"**	**165.5**	**60**	**60**	**92**	**80**	**70**	**144**
MAS	40	1.250",20,25,30	149	65	65	100	140	100	130
BONFIGLIOLI	A05	25mm	206	57.5	57.5	99	75	80	120.5
SEW	K29	25mm , 1.00"	134	63	63	112	70	90	126
NORD	SK92172.1**	0.75"	109.45	63	63	120	90	90	120

ALU Series Compatibility Guide GB 633

		Output torque (Nm)	Radial load (N)	Ratio		Weight (kg)
				i min	I min 2/3	2 stages only
GEARSYNC	**GB 633**	**250**	**6500**	**6.58**	**211.31**	**9.5**
MAS	K50	200	7200	5.67	325.07	
MOTOVARIO	A53B	250	4000	7.91	342.65	
Bonfiglioli	A20 3 UHP	250	6200	9.4	329.4	
TRAMEC	TF63 C	200	3500	7.94	304	
SEW	KA37	200	5640	3.98	106.38	
NORD	SK92372	220	4700	5.3	62.85	
RADICON	K0332	225	6000	8.33	125.96	
LENZE	GKS04	195	7000	5.12	163.33	
FLENDER	K38	250	6446	5.65	179.13	

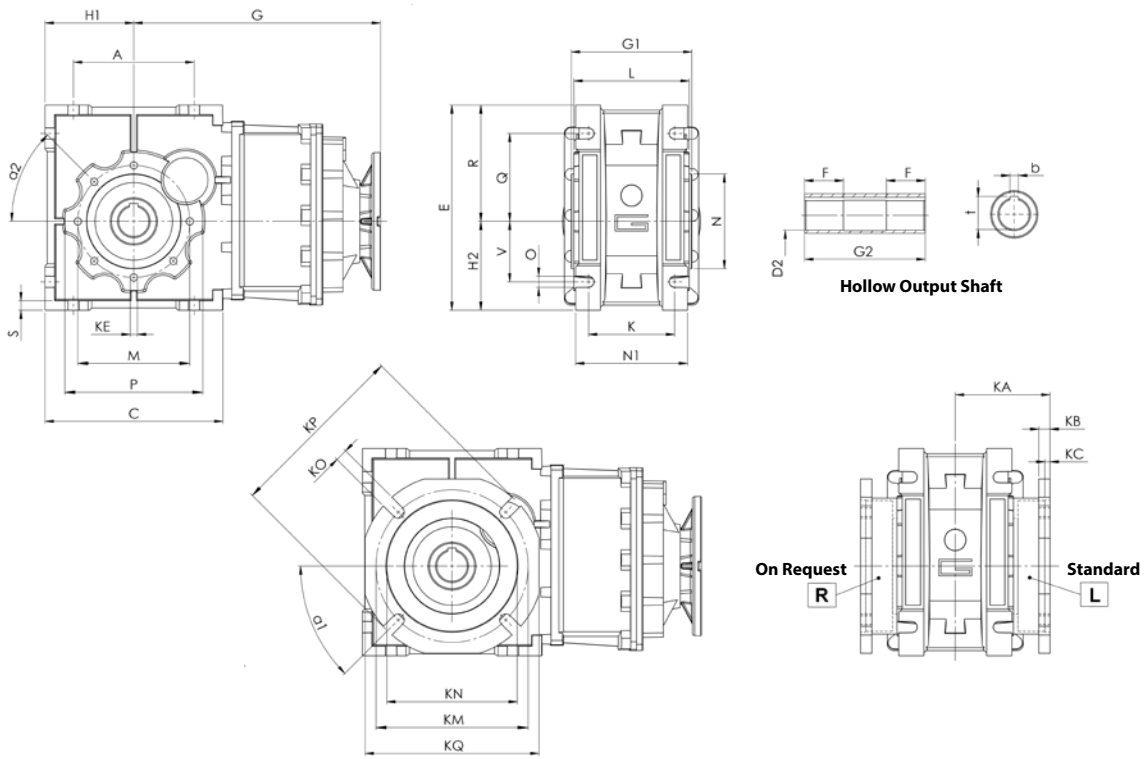

		Output shaft "D2"	Output centerline to input "G"	Edge to output centerline "H1"	Bottom to output centerline "H2"	Overall width "G1"	Mounting "A"	Mounting "K"	Overall height "E"
GEARSYNC	**GB 633**	**30mm, 1.125"**	**218.5**	**72**	**72**	**112**	**100**	**85**	**174**
MAS	K50	1.375", 25,30,35	233	85	85	109	110	110	170
MOTOVARIO	A53B	25,28	248	80	80	112	110	80	160
BONFIGLIOLI	A20 3 UHP	30,35	282	80	80	136	120	90	160
TRAMEC	TF63 C	25,28,30	224	70	70	120	110	75	150
SEW	KA37	25,30	139	71	71	120	130	60	164
NORD	SK92372	25,30	202	100	100	170	130	120	145
RADICON	K0332	25,30	248	71	112	150	130	70	155
LENZE	GKS04	25,30	230	80	125	124	115	105	165
FLENDER	K38	30	230	80	80	142	100	100	145

GB 903 Compatibility Guide ALU Series

		Output torque (Nm)	Radial load (N)	Ratio		Weight (kg)
				i min	I min 2/3	2 stages only
GEARSYNC	**GB 903**	**500**	**9500**	**6.65**	**221.88**	**18.4**
MAS	K60	400	9250	5.51	494.55	
MOTOVARIO	BA73UC	430	5500	8.36	442.76	
Bonfiglioli	A30 3 UHP	410	9600	5.4	400.8	
TRAMEC	TC90BO	630	6700	4.56	613.46	
SEW	K47	400	5920	4.64	131.87	
NORD	SK92672	380	8100	4.85	59.25	
RADICON	K0432	400	6000	8.05	120.2	
LENZE	GKS05	350	7300	6.86	146.59	
FLENDER	K38	250	6446	5.65	179.13	

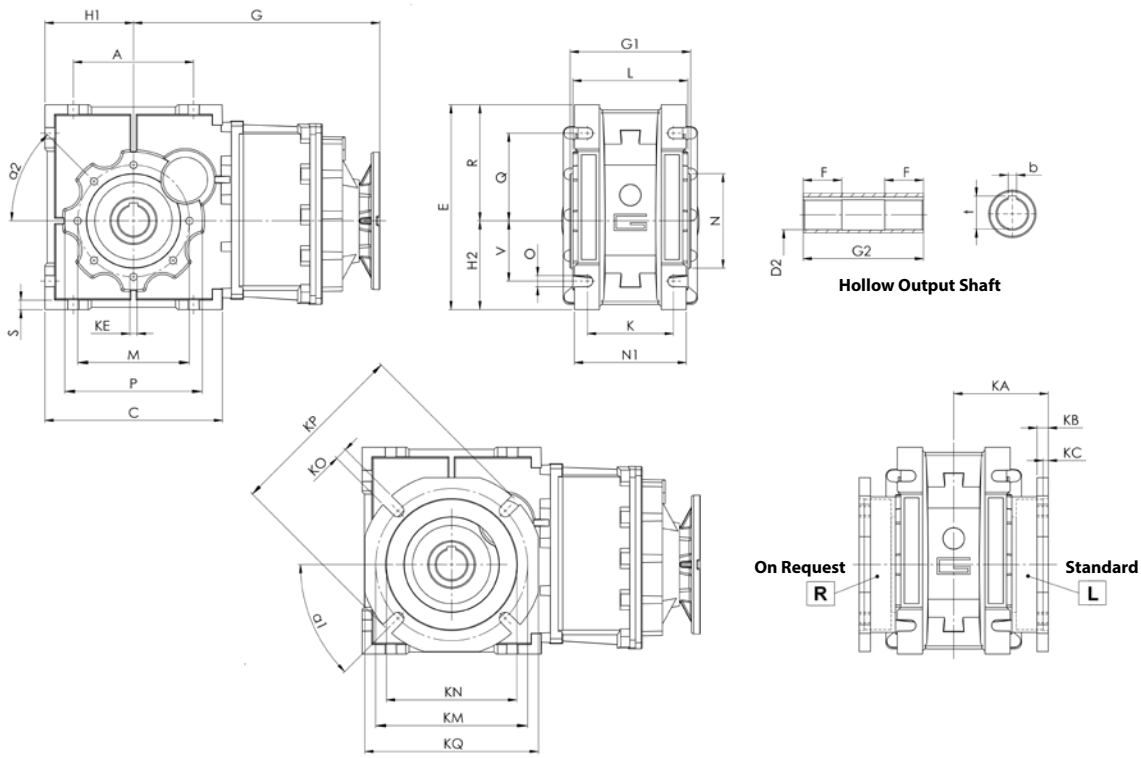

		Output shaft "D2"	Output centerline to input "G"	Edge to output centerline "H1"	Bottom to output centerline "H2"	Overall width "G1"	Mounting "A"	Mounting "K"	Overall height "E"
GEARSYNC	**GB 903**	**35mm, 1.375"**	**287**	**103**	**103**	**140**	**140**	**100**	**238**
MAS	K60	1.50", 30,35,40	278	100	100	124	140	140	200
MOTOVARIO	BA73UC	30,35	259.5	90	90	140	110	94.5	200
BONFIGLIOLI	A30 3 UHP	30,35	300	90	90	160	126	95	180
TRAMEC	TC90BO	30,35	259	80	80	130	126	104	160
SEW	K47	30,35	243	71	71	150	115	110	185
NORD	SK92672	30,35	302	100	100	170	130	130	165
RADICON	K0432	30,35	319	71	71	150	130	130	177
LENZE	GKS05	30,35	310	80	80	124	115	140	190
FLENDER	K38	30,35	249	80	80	142	100	95	145

ABOUT DIEQUA

Founded in 1980 by Dietmar Quaas, and now owned by his sons, DieQua Corporation has expanded from a single product line to become a leading manufacturer and supplier of an extensive line of high-quality power transmission and precision motion control products, including gearboxes, servo gearheads, screw jack systems, speed reducers, cycloidal reducers, and connecting components. The company also offers custom product modifications and complete design solutions for virtually any application. DieQua Corporation serves a wide range of industries, including medical and health care, marine engineering, renewable energy, mining, transportation, steel, forestry and lumber, water and wastewater, automotive, and factory automation, to name a few.

An experienced and knowledgeable technical sales, customer service, and engineering support staff, as well as local distributors, ensure that DieQua customers in North America, Mexico and South America select the optimum components, systems, and best design solutions for their specific requirements.

The DieQua family of products

Spiral Bevel Gearboxes

Servo Gearheads

Cycloidal Reducers & Positioners

Screw Jack Systems

Helical Speed Reducers

Speed Modulating Gearboxes

Zero Backlash Couplings and Line Shafts

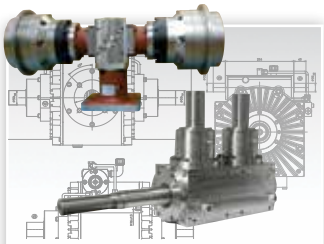

Custom Designs

The DieQua Advantage

Engineering Support

DieQua Corporation has several decades of combined experience specifying power transmission and motion control components. This assures proper selection of components and systems to suit your unique requirements.

Warehousing

We pride ourselves for our extensive in-stock inventory. For fast product turnaround, DieQua Corporation stocks many components of various ratios and sizes, ready to ship fast.

Manufacturing and Assembly

DieQua Corporation now manufactures or assembles most of the products, for on-time delivery of standard orders as well as prototypes. We are ISO 9001 certified and are constantly improving our quality systems to ensure our customers receive the best products.

DIEQUA Corporation

180 Covington Drive
Bloomingdale, IL 60108 USA

630.980.1133

www.diequa.com

GEARSYNC by DIEQUA

0525/XK